Volumes - Lesson 1

Volume of a Cylinder - Non-Calculator (given area and height)

LI

- Calculate the Volume of a Cylinder.

SC

- Use formula.

Jan 10-12:11

Volume of a Cylinder

$$V = A \times h$$

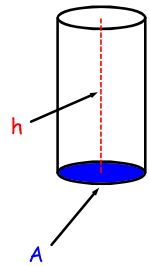

(A is area of base, h is height)

Example 1

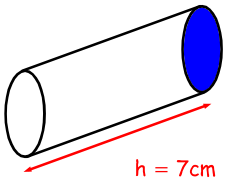

$V = A \times h$

$V = 46 \times 7$

$V = 322\ cm^3$

Example 2

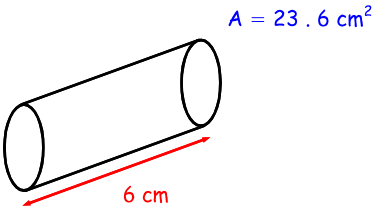

$V = A \times h$

$V = 23.6 \times 6$

$V = 141.6\ cm^3$

Example 3

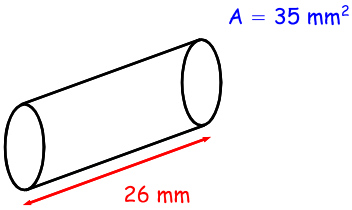

$V = A \times h$

$V = 35 \times 26$

$V = 910\ mm^3$

x	30	5
20		
6		

Jun 18-08:10

1)

$A = 77\ cm^2$

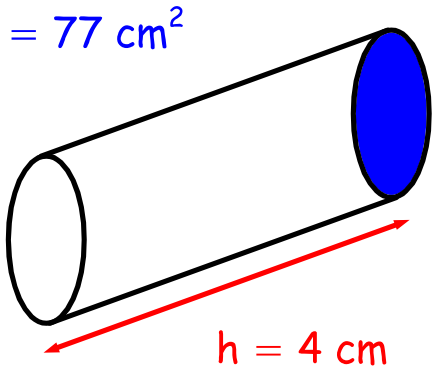

2)

$A = 45.6\ cm^2$

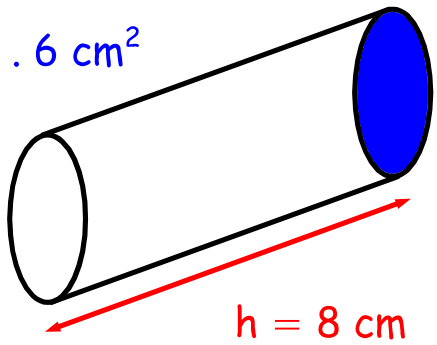

3)

$A = 95.4\ cm^2$

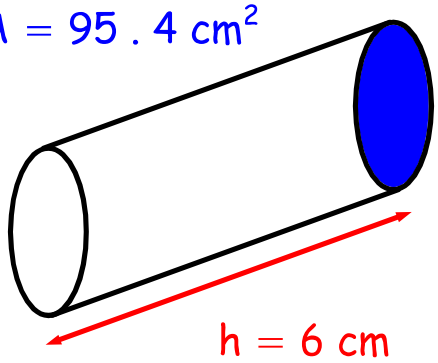

4)

$A = 1\,000.05\ cm^2$

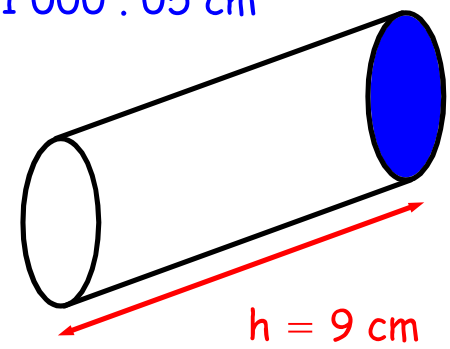

1)

$A = 77\ cm^2$

$V = 308\ cm^3$

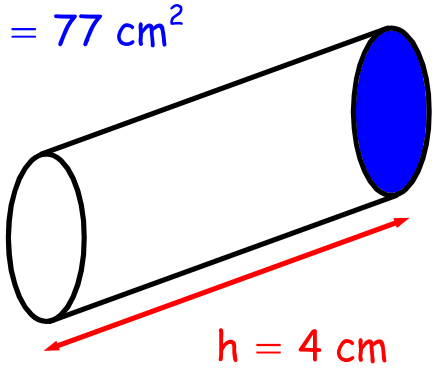

$h = 4\ cm$

2)

$A = 45.6\ cm^2$

$V = 364.8\ cm^3$

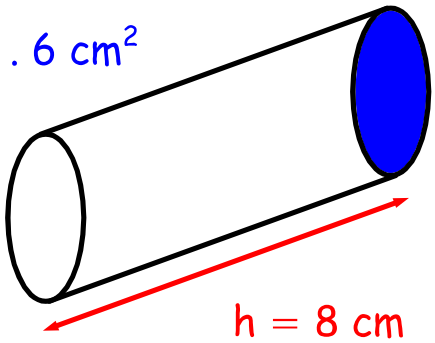

$h = 8\ cm$

3)

$A = 95.4\ cm^2$

$V = 572.4\ cm^3$

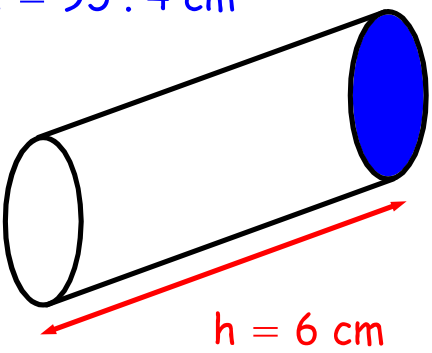

$h = 6\ cm$

4)

$A = 1\ 000.05\ cm^2$

$V = 9\ 000.45\ cm^3$

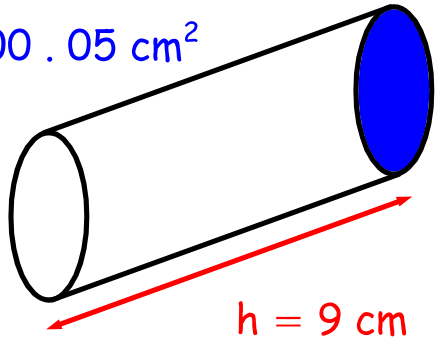

$h = 9\ cm$

Calculate the volumes of these cylinders :

1) $A = 8\ cm^2, h = 4\ cm$

2) $A = 16\ cm^2, h = 10\ cm$

3) $A = 19\ cm^2, h = 11\ cm$

4) $A = 21\ cm^2, h = 13\ cm$

5) $A = 38\ cm^2, h = 56\ cm$

6) $A = 67\ cm^2, h = 67\ cm$

7) $A = 50\ cm^2, h = 100\ cm$

8) $A = 200\ cm^2, h = 101\ cm$

9) $A = 8.5\ cm^2, h = 9\ cm$

10) $A = 9.9\ cm^2, h = 8\ cm$

11) $A = 17.5\ cm^2, h = 6\ cm$

12) $A = 33.1\ cm^2, h = 7\ cm$

13) $A = 235.6\ cm^2, h = 8\ cm$

14) $A = 4\,356\ m^2, h = 9\ m$

15) $A = 5\,555\ mm^2, h = 5\ mm$

16) $A = 200\ mm^2, h = 200\ mm$

Answers

1) $A = 8\ cm^2, h = 4\ cm$ — $32\ cm^3$

2) $A = 16\ cm^2, h = 10\ cm$ — $160\ cm^3$

3) $A = 19\ cm^2, h = 11\ cm$ — $209\ cm^3$

4) $A = 21\ cm^2, h = 13\ cm$ — $273\ cm^3$

5) $A = 38\ cm^2, h = 56\ cm$ — $2\ 128\ cm^3$

6) $A = 67\ cm^2, h = 67\ cm$ — $4\ 489\ cm^3$

7) $A = 50\ cm^2, h = 100\ cm$ — $5\ 000\ cm^3$

8) $A = 200\ cm^2, h = 101\ cm$ — $20\ 200\ cm^3$

9) $A = 8.5\ cm^2, h = 9\ cm$ — $76.5\ cm^3$

10) $A = 9.9\ cm^2, h = 8\ cm$ — $79.2\ cm^3$

11) $A = 17.5\ cm^2, h = 6\ cm$ — $105\ cm^3$

12) $A = 33.1\ cm^2, h = 7\ cm$ — $231.7\ cm^3$

13) $A = 235.6\ cm^2, h = 8\ cm$ — $1\ 884.8\ cm^3$

14) $A = 4\ 356\ m^2, h = 9\ m$ — $39\ 204\ m^3$

15) $A = 5\ 555\ mm^2, h = 5\ mm$ — $27\ 775\ mm^3$

16) $A = 200\ mm^2, h = 200\ mm$ — $40\ 000\ mm^3$